RoHS Compliant

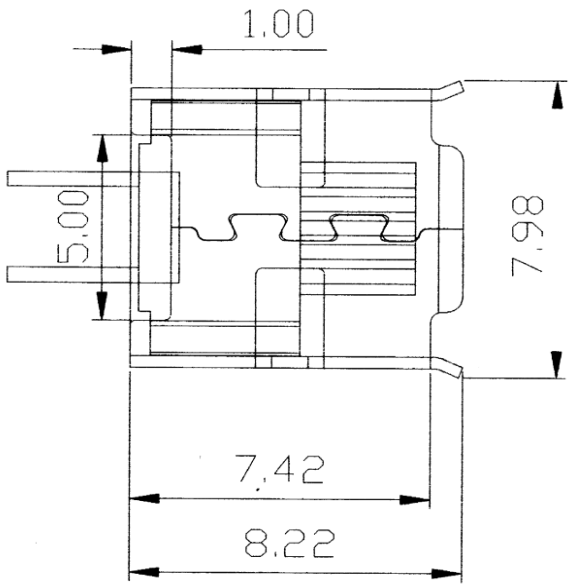

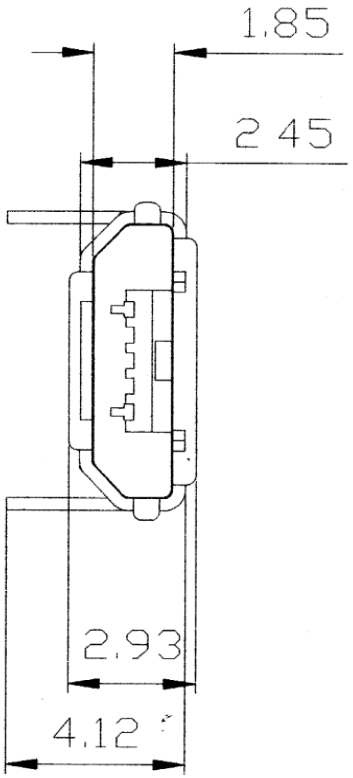

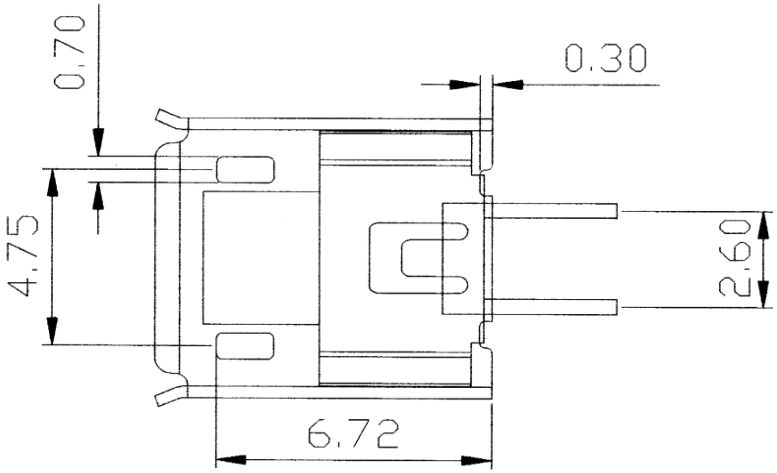

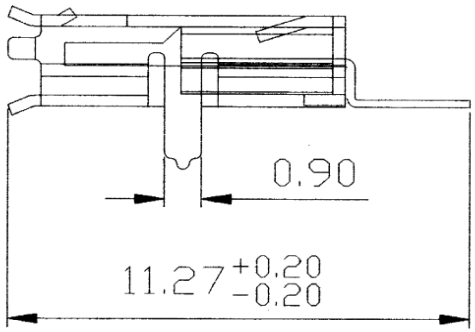

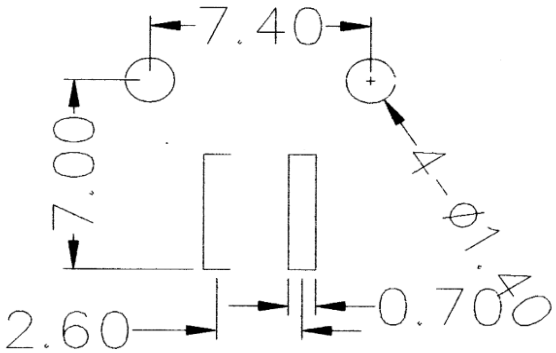

Recommended PCB Layout

Specification

Current rating: 1Amp
Insulation resistance: 100 MΩ min.
Contact resistance: 30 mΩ max initial
40 mΩ after 10,000 cycles
Dielectric withstanding voltage: 100V AC/minute
Mating force: 35N max.
Unmating force: 10N min. initial,
8~20 after 10,000 cycles
Temperature range: -30℃ ~ +80℃

Materials & Finish

Housing: PA66, UL94V-0
Contact: Phosphor Bronze
Plating: Gold on mating area
Tin plated on soldering balls
Nickel under plated overall
Shell: SUS, Nickel under plated surface layer

E				Drawn:	General Tolarance			Useconn Electronics Ltd.	Part No.
D				Jack Lin	5~15	15~30	30~50		MRUSB-2B-D14NI-S306
C				Checked:	±0.30	±0.40	±0.50		
B	20-Sep-17	change version	Jack	Ivy Lee	Unit : mm				File No. CS-MRUSB-2B-D14NI-S306
A	23-Dec-15	new release	Jack	Appraval:	Scale :			Title: Micro USB, B type Female	
Rev.	Date	File	BY	Simon Chen	Sheet : 1/1			2pin Dip solder type for PCB	